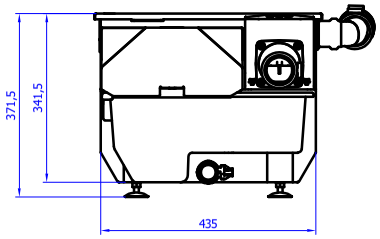

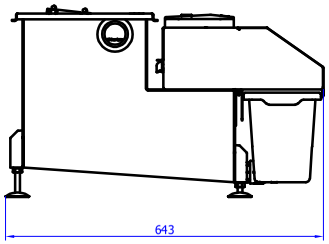

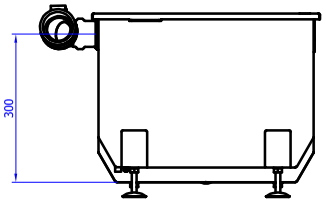

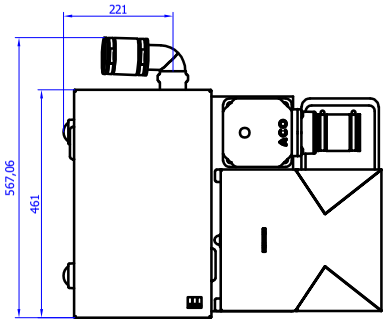

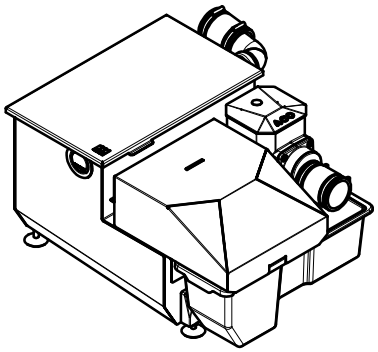

001					03.10.2025
Index:	Modification:			Author:	Date:
Material number:	Old article number:	Basic material	Surface:	Weight: N/A	Doc. type: P
ACO Industries k.s. Havlíčkova 283 Lanškroun, 563 01, CZ Tel.: +420 465 401 111 www.aco-industries.cz		General tolerance	Welding tolerance: EN ISO 13920 - AE	Projection: ISO-E	Format: A1
			Created by: plangpaul	Reviewed by:	Starting number:	Scale: 1 : 5

Title:
AGC 050_2.0

Inventor

The reproduction, distribution and utilization of this document as well as the communication of its contents to others without express authorization is prohibited. Offenders will be held liable for the payment of damages. All rights reserved in the event of the grant of a patent, utility model or design. Copyright by ACO Industries

Drawing-no:	Index:	Release date:	Sheet:
	001		1 / 1