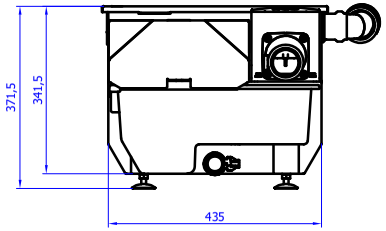

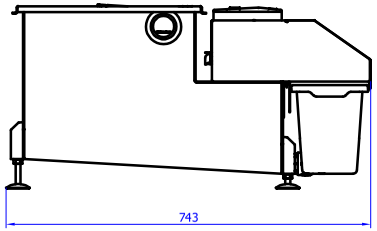

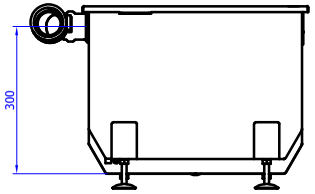

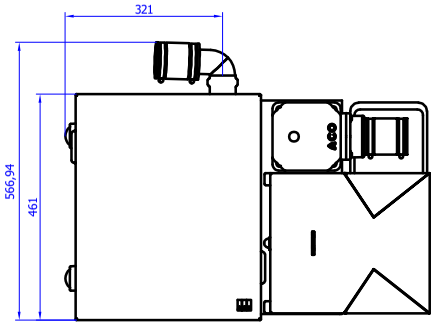

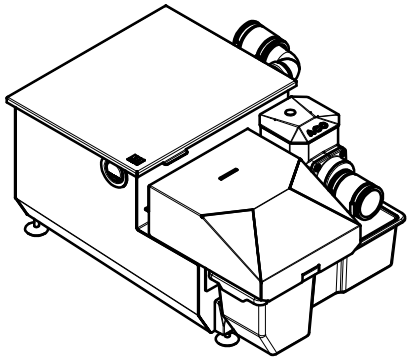

001					06.10.2025
Index:	Modification:			Author:	Date:
Material number:	Old article number:	Basic material:	Surface:	Weight: 28.84 kg	Doc. type: P
A CO Industries k.s. Hlavní třída 280 562 22 Přibyslav, CZ Tel.: +420 569 491111 www.aco-industries.cz		General tolerance:	Welding tolerance: EN ISO 13920 - AE	Projection: ISO-E	Format: A1
		Created by: glangpaul	Reviewed by:	Boring number:	Scale: 1 : 5

Title:
AGC 100_2.0

Inventor

The reproduction, distribution and utilization of this document as well as the communication of its contents to others without express authorization is prohibited. Offenders will be held liable for the payment of damages. All rights reserved in the event of the grant of a patent, utility model or design, observe copyright by DIN 34-1.

Drawing-no:	Index:	Release date:	Sheet:
	001		1 /1