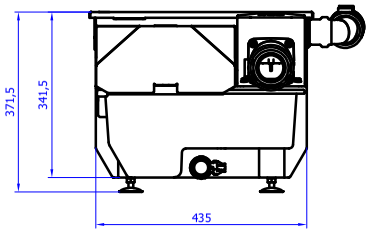

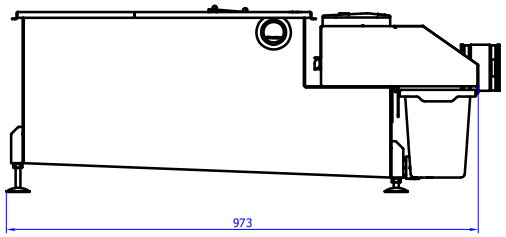

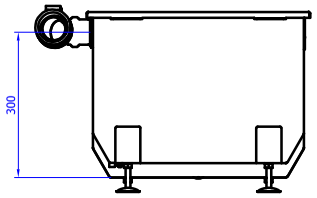

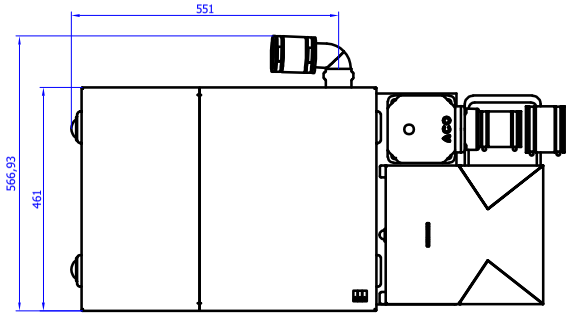

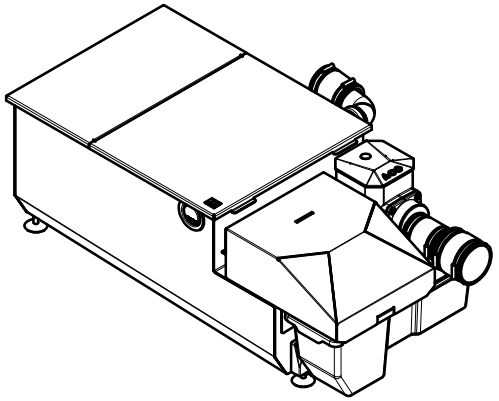

001					09.10.2025
Index	Modification:			Author:	Date:
Material number:	Old article number:	Basic material:	Surface:	Weight: N/A	Doc. type: P
ACO Industries k.s. Hlavní Dlouhá 260 082 22 Přibyslav CZ Tel.: +420 595 481 111 www.aco-industries.cz		General tolerance:	Welding tolerance: EN ISO 13920 - AE	Projection: ISO-E	Format: A1
		Created by: plangpaul	Reviewed by:	Sorting number	Scale: 1 : 5

Title:
AGC 150_2.0

Inventor

The reproduction, distribution and utilization of this document as well as the communication of its contents to others without express authorization is prohibited. Offenders will be held liable for the payment of damages. All rights reserved in the event of the grant of a patent, utility model or design, observe copyright to DIN 34 beachten.

Drawing no:	Index:	Release date:	Sheet:
	001		1 /1