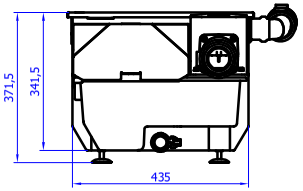

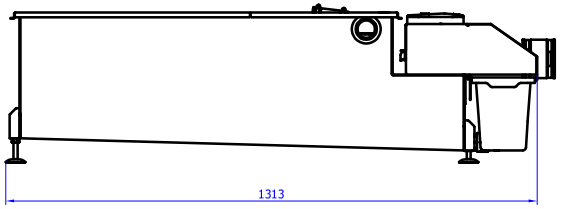

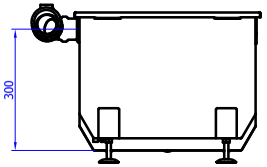

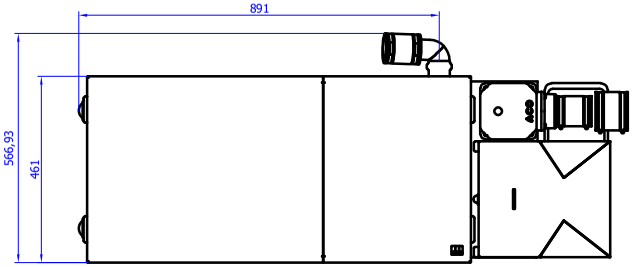

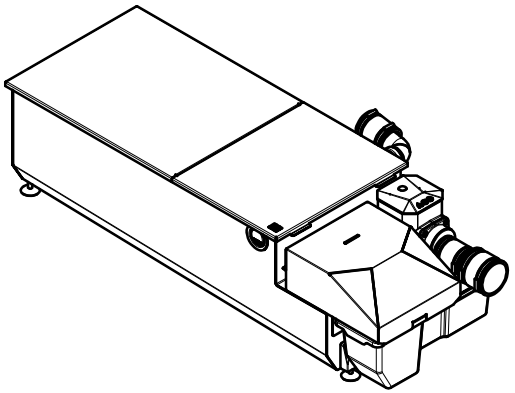

001					15.10.2025
Index:	Modification:			Author:	Date:
Material number:	Old article number:	Basic material:	Surface:	Weight: N/A	Doc. type: P
A C O Industries k.s. Hlavní 8 (vrata 26) 550 22 Přibyslav, CZ Tel.: +420 569 491 111 www.aco-industries.cz		General tolerance:	Welding tolerance: EN ISO 13920 - AE	Projection (ISO):	Format: A1
		Created by: plangpaul	Reviewed by:	Sorting number:	Scale: 1 : 6

Title:
AGC 2.20_2.0

Inventor

The reproduction, distribution and utilization of this document as well as the communication of its contents to others without express authorization is prohibited. Offenders will be held liable for the payment of damages. All rights reserved in the event of the grant of a patent, utility model or design, observe copyright by DIN 34 beachten!

Drawing no:	Index:	Release date:	Sheet:
	001		1 / 1